Please check the examination details below before entering your candidate information

Candidate surname	Other names

Pearson Edexcel Level 1/Level 2 GCSE (9–1)

Centre Number | Candidate Number

Time 1 hour 45 minutes

Paper reference **1DT0/1B**

Design and Technology

COMPONENT 1: Papers and Boards

You must have:
calculator, ruler, HB pencil, protractor, compass

Total Marks

Instructions

- Use **black** ink or ball-point pen.
- **Fill in the boxes** at the top of this page with your name, centre number and candidate number.
- Answer **all** questions.
- Answer the questions in the spaces provided – *there may be more space than you need.*
- Calculators may be used.
- Any diagrams may NOT be accurately drawn, unless otherwise indicated.
- You must **show all your working out** with **your answer clearly identified** at the **end of your solution**.

Information

- The total mark for this paper is 100.
- The marks for **each** question are shown in brackets – *use this as a guide as to how much time to spend on each question.*

Advice

- Read each question carefully before you start to answer it.
- Try to answer every question.
- Check your answers if you have time at the end.
- Good luck with your examination.

Turn over ▶

P65427A
©2021 Pearson Education Ltd.
1/1/1/1/1/1/1/1/1/1

P 6 5 4 2 7 A 0 1 2 8

Pearson

SECTION A

Core

Answer ALL questions. Write your answers in the spaces provided.

1 (a) The materials that products are made from are chosen because of their properties.

Figure 1 shows a table of products.

For each of the products shown, give a property of the material it is made from that makes the material suitable for the product.

The first one has been done for you.

Picture of product	Material and product	Property	
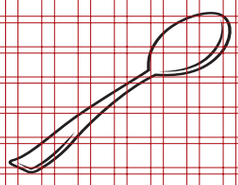	Stainless steel spoon	Corrosion resistant	
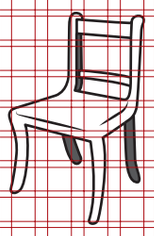	Mahogany dining room chair	(i)	(1)
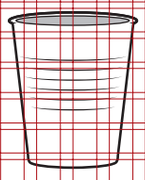	High Impact Polystyrene (HIPS) drinking cup	(ii)	(1)
	Wool scarf	(iii)	(1)
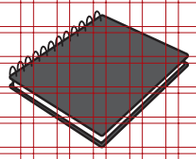	Cartridge paper sketch book	(iv)	(1)

Figure 1

DO NOT WRITE IN THIS AREA
DO NOT WRITE IN THIS AREA
DO NOT WRITE IN THIS AREA
DO NOT WRITE IN THIS AREA
DO NOT WRITE IN THIS AREA
DO NOT WRITE IN THIS AREA

(b) Explain **one** advantage of using wind to generate energy.

(2)

.....

.....

.....

.....

As wind turbines get bigger and taller they produce more power.

(c) Figure 2 shows a table of information about two different wind turbines.

	Wind Turbine A	**Wind Turbine B**
Power (kW)	500	800

Figure 2

Calculate how much more power wind turbine B produces in comparison to wind turbine A as a percentage.

(2)

Answer ..... %

(Total for Question 1 = 8 marks)

DO NOT WRITE IN THIS AREA
DO NOT WRITE IN THIS AREA
DO NOT WRITE IN THIS AREA
DO NOT WRITE IN THIS AREA
DO NOT WRITE IN THIS AREA
DO NOT WRITE IN THIS AREA

2 Figure 3 shows a game.

The two sets of cubes are made from contrasting coloured non-ferrous metals.

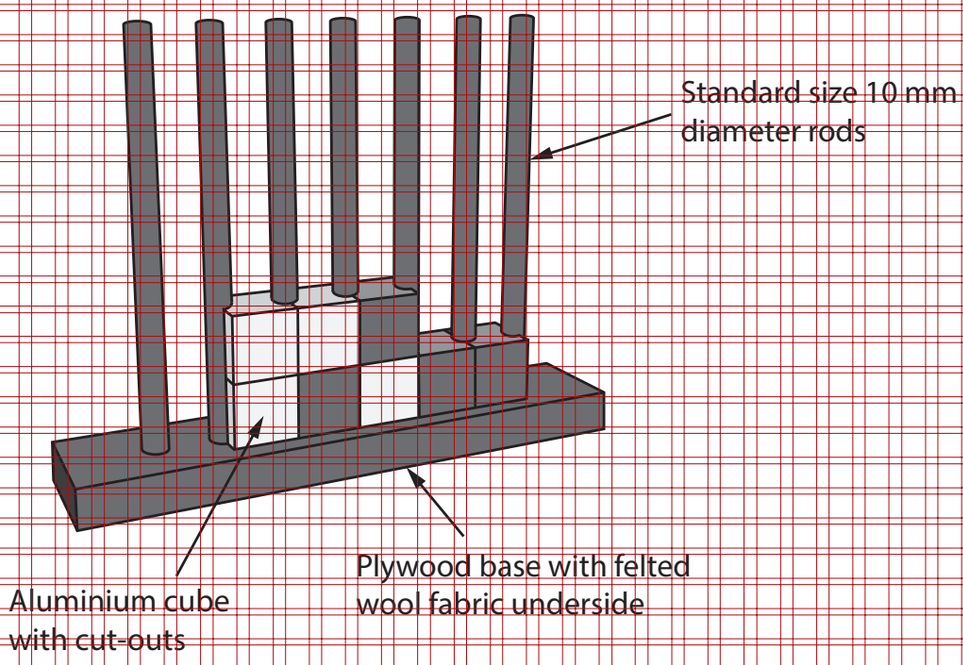

Figure 3

Aluminium is used to manufacture one set of the coloured cubes.

(a) Name **one** other appropriate non-ferrous metal that could be used to make the other set of coloured cubes.

(1)

.....

(b) Explain **one** reason for using standard sized 10 mm diameter rods.

(2)

.....

.....

.....

.....

DO NOT WRITE IN THIS AREA
DO NOT WRITE IN THIS AREA
DO NOT WRITE IN THIS AREA
DO NOT WRITE IN THIS AREA
DO NOT WRITE IN THIS AREA
DO NOT WRITE IN THIS AREA

(c) Explain **one** property of felted wool fabric that makes it an appropriate choice of material for gluing to the underside of the plywood base.

(2)

.....

.....

.....

.....

DO NOT WRITE IN THIS AREA
DO NOT WRITE IN THIS AREA
DO NOT WRITE IN THIS AREA
DO NOT WRITE IN THIS AREA
DO NOT WRITE IN THIS AREA
DO NOT WRITE IN THIS AREA

Figure 4 shows a dimensioned isometric drawing of one of the metal cubes with cut-outs.

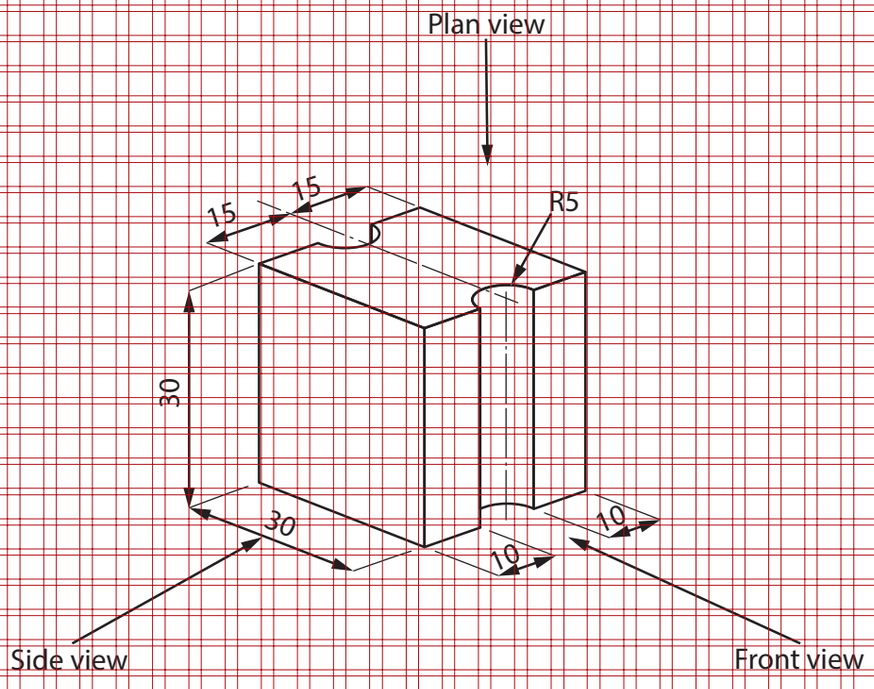

All dimensions in mm

Diagram not to scale

Figure 4

(d) Complete a full-sized orthographic drawing of the metal cube shown in Figure 4 on the 5 mm orthographic grid on the opposite page.

The front view and part of the plan view have already been done for you.

(4)

DO NOT WRITE IN THIS AREA
DO NOT WRITE IN THIS AREA
DO NOT WRITE IN THIS AREA
DO NOT WRITE IN THIS AREA
DO NOT WRITE IN THIS AREA
DO NOT WRITE IN THIS AREA

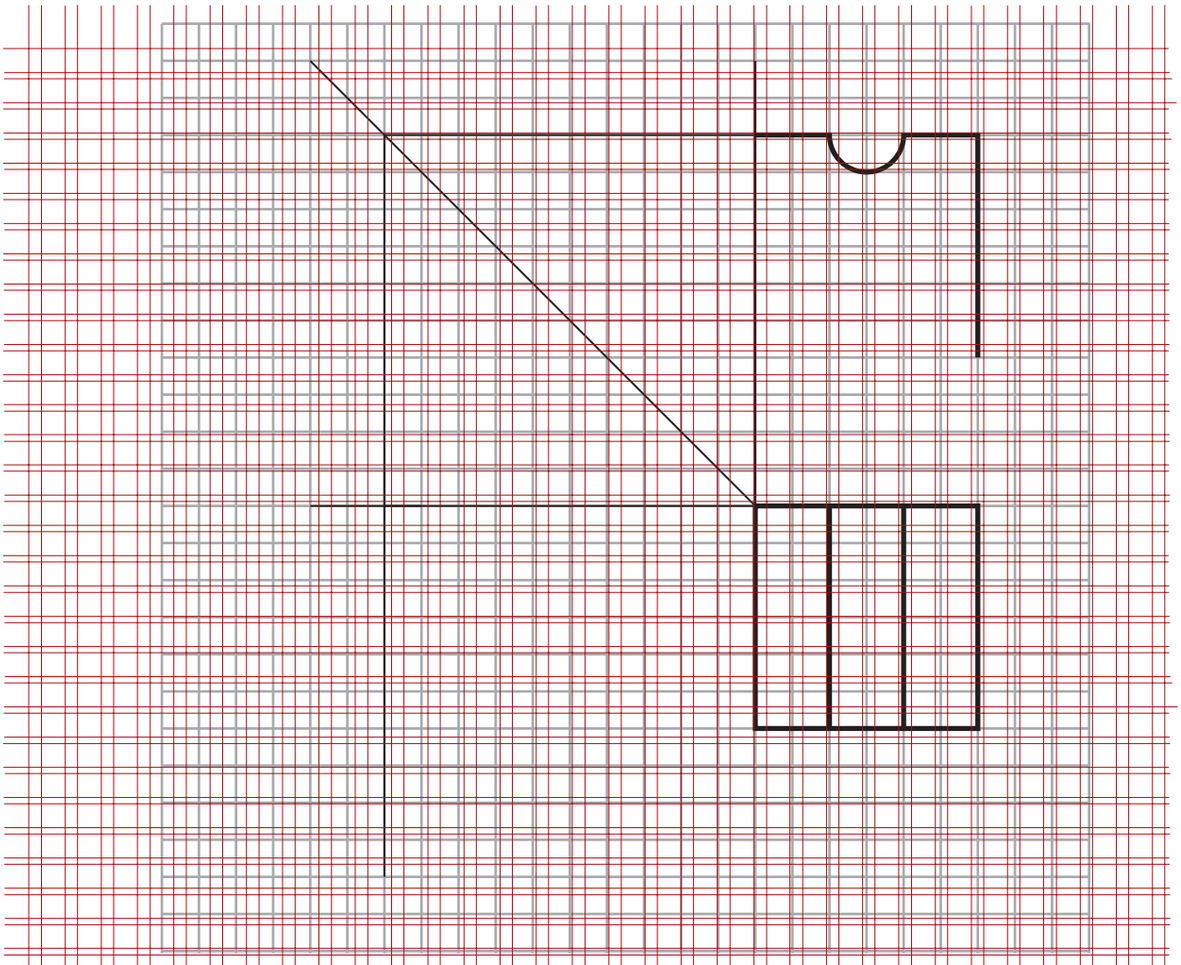

5mm orthographic grid

(Total for Question 2 = 9 marks)

DO NOT WRITE IN THIS AREA
DO NOT WRITE IN THIS AREA
DO NOT WRITE IN THIS AREA
DO NOT WRITE IN THIS AREA
DO NOT WRITE IN THIS AREA
DO NOT WRITE IN THIS AREA

3 Figure 5 shows a sports rowing boat manufactured from fibreglass, which is a composite material.

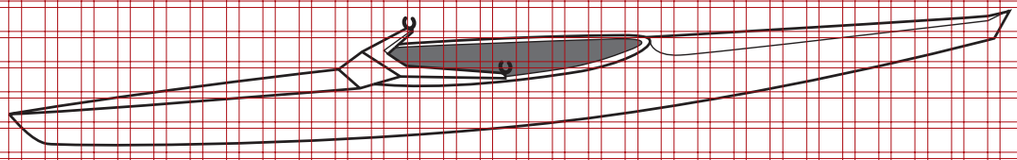

Figure 5

(a) Name **one** composite material other than fibreglass.

(1)

.....

(b) Explain **one** reason for manufacturing the sports rowing boat from fibreglass.

(2)

.....

.....

.....

.....

(c) When manufacturing fibreglass, the glass fibre matting is coated with a mixture of resin and a catalyst.

The resin and catalyst are mixed in the ratio of 100 g resin to 2 ml of catalyst.

Calculate how much catalyst would be added to 650 g of resin.

(2)

Answer ..... ml

DO NOT WRITE IN THIS AREA
DO NOT WRITE IN THIS AREA
DO NOT WRITE IN THIS AREA
DO NOT WRITE IN THIS AREA
DO NOT WRITE IN THIS AREA
DO NOT WRITE IN THIS AREA

(d) The sports rowing boat oar shown in Figure 6 is a lever.

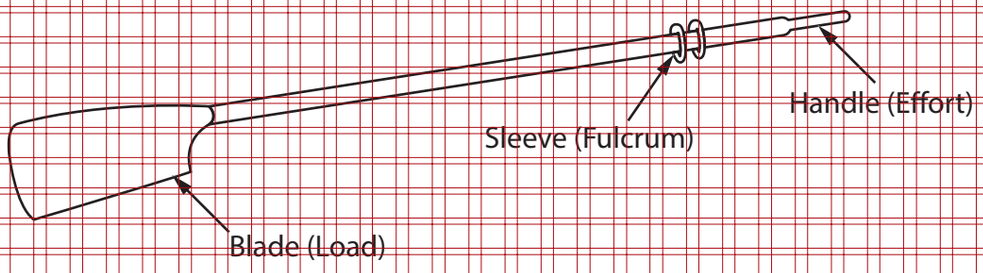

Figure 6

Analyse the boat oar.

(i) Name the lever classification for the sports rowing boat oar.

(1)

.....

(ii) State the type of movement shown by the sports rowing boat oar handle when in use.

(1)

.....

(e) Explain **two** benefits of sports textiles for athletes.

(4)

1 .....

.....

.....

2 .....

.....

.....

(Total for Question 3 = 11 marks)

DO NOT WRITE IN THIS AREA
DO NOT WRITE IN THIS AREA
DO NOT WRITE IN THIS AREA
DO NOT WRITE IN THIS AREA
DO NOT WRITE IN THIS AREA
DO NOT WRITE IN THIS AREA

4 Figure 7 shows a one piece corrugated board package for a smart lightbulb.

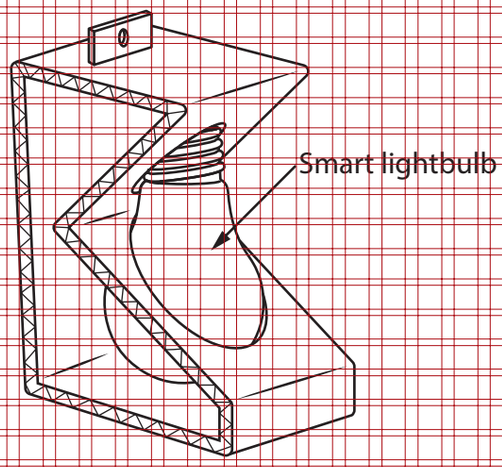

Figure 7

(a) Explain **one** working property of corrugated board that makes it an appropriate choice of material to make the lightbulb package.

(2)

.....

.....

.....

.....

(b) Explain **one** way that the cost of materials has been kept to a minimum for the lightbulb package.

(2)

.....

.....

.....

.....

DO NOT WRITE IN THIS AREA
DO NOT WRITE IN THIS AREA
DO NOT WRITE IN THIS AREA
DO NOT WRITE IN THIS AREA
DO NOT WRITE IN THIS AREA
DO NOT WRITE IN THIS AREA

(c) The net for the package measures 40 cm long by 8 cm wide.

The designer needs to increase the surface area of the package by $1/8^{th}$ for greater protection of the lightbulb.

Calculate the new surface area of material required for the package.

(2)

Answer ..... cm^2

The smart lightbulb can be connected to the internet.

(d) Discuss how the Internet of Things (IoT) has led to greater independence for older people living on their own in their homes.

(6)

.....

.....

.....

.....

.....

.....

.....

.....

.....

.....

.....

.....

DO NOT WRITE IN THIS AREA
DO NOT WRITE IN THIS AREA
DO NOT WRITE IN THIS AREA

(Total for Question 4 = 12 marks)

TOTAL FOR SECTION A = 40 MARKS

DO NOT WRITE IN THIS AREA
DO NOT WRITE IN THIS AREA
DO NOT WRITE IN THIS AREA
DO NOT WRITE IN THIS AREA
DO NOT WRITE IN THIS AREA
DO NOT WRITE IN THIS AREA

DO NOT WRITE IN THIS AREA
DO NOT WRITE IN THIS AREA
DO NOT WRITE IN THIS AREA
DO NOT WRITE IN THIS AREA
DO NOT WRITE IN THIS AREA
DO NOT WRITE IN THIS AREA

BLANK PAGE

SECTION B BEGINS ON THE NEXT PAGE.

SECTION B

Papers and boards

Answer ALL questions. Write your answers in the spaces provided.

5 Figure 8 shows a design solution for a presentation case for boxes of biscuits together with some additional information.

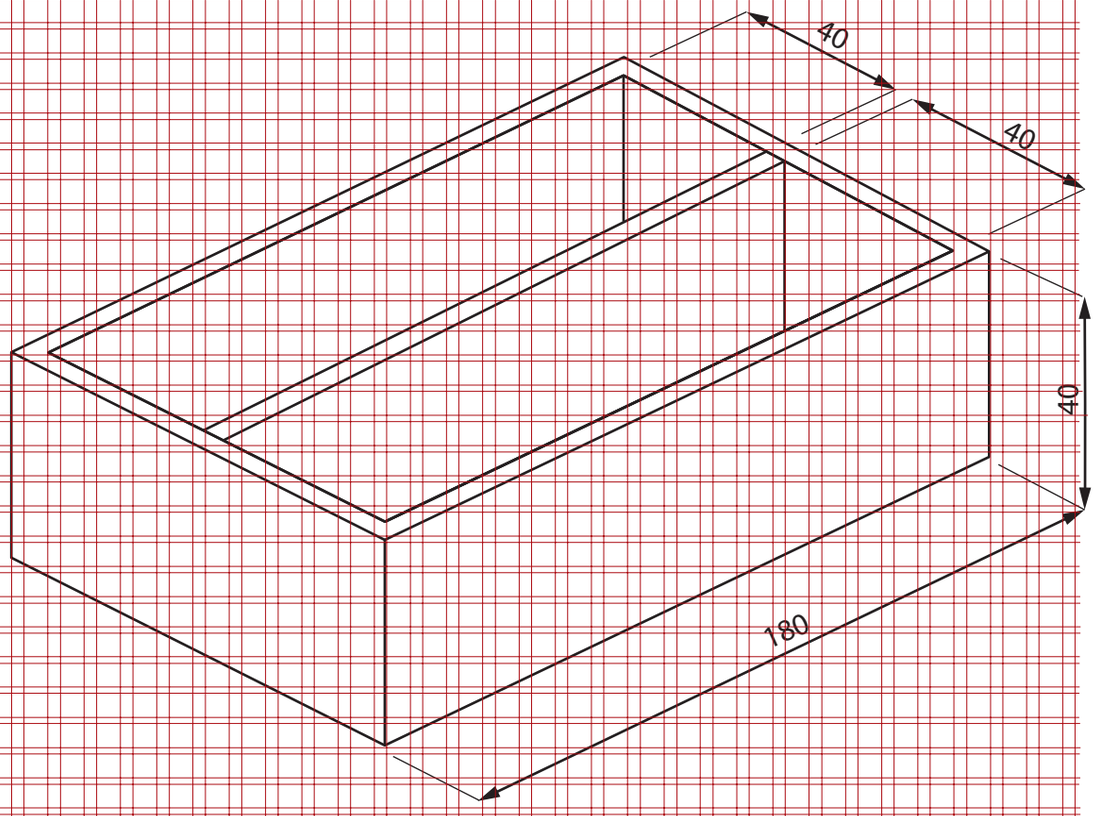

Additional information

Maximum dimensions of the boxes of biscuits

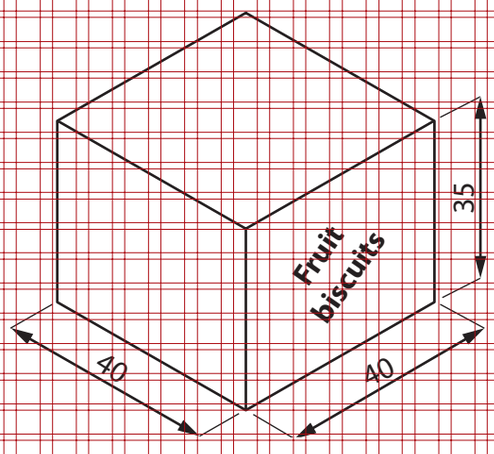

Figure 8

All dimensions in mm

DO NOT WRITE IN THIS AREA
DO NOT WRITE IN THIS AREA
DO NOT WRITE IN THIS AREA
DO NOT WRITE IN THIS AREA
DO NOT WRITE IN THIS AREA
DO NOT WRITE IN THIS AREA

(a) The presentation case for boxes of biscuits needs to be improved to include the following specification points.

The presentation case for boxes of biscuits must:

- provide separate storage spaces for different sized boxes of biscuits and allow the type of biscuit to be seen
- be portable when two presentation cases are securely fixed on top of each other
- include a tamper proof method that will stop the boxes of biscuits from falling out.

Use notes and sketches, on the outline below, to show how the presentation case could be modified to include these three specification points.

You will be marked on how you apply your understanding of design and technology, not your graphical skills.

(6)

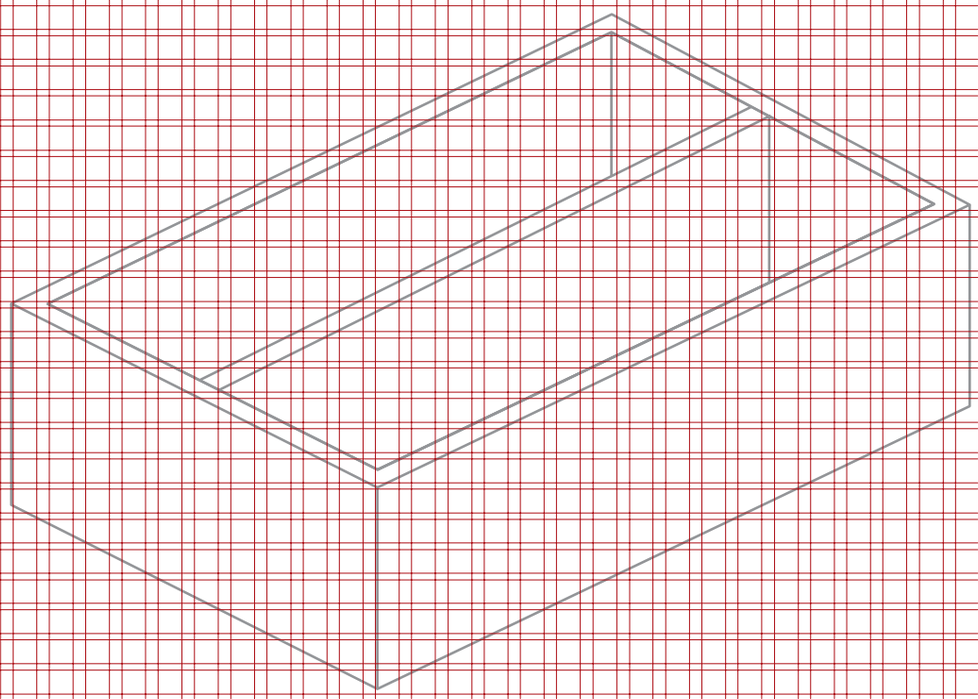

DO NOT WRITE IN THIS AREA
DO NOT WRITE IN THIS AREA
DO NOT WRITE IN THIS AREA
DO NOT WRITE IN THIS AREA
DO NOT WRITE IN THIS AREA
DO NOT WRITE IN THIS AREA

(b) Figure 9 shows a cardboard boot that is used to help young children learn how to tie their own shoelaces.

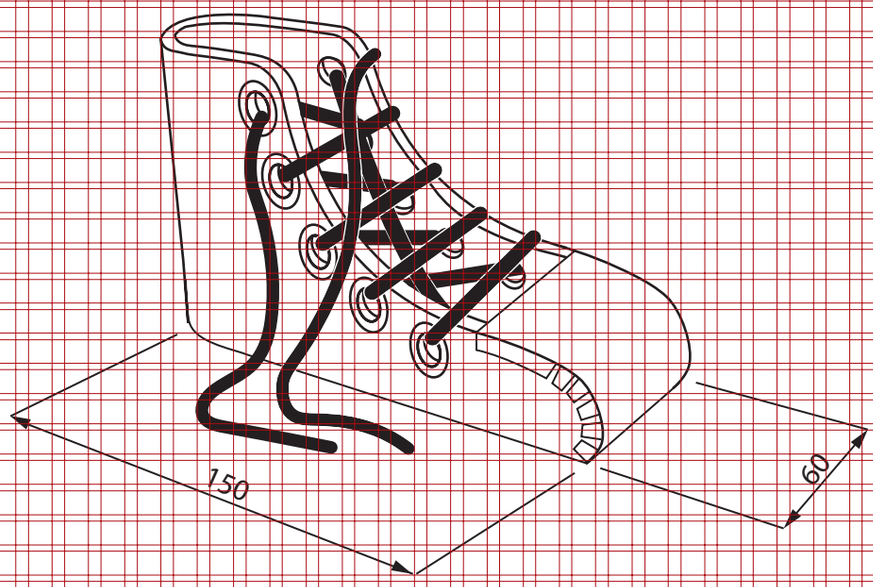

All dimensions in mm

Figure 9

Explain **two** ways that the cardboard boot meets, or fails to meet, the criteria of providing a method to help young children learn how to tie their own shoelaces.

(4)

1 .....

.....

.....

.....

2 .....

.....

.....

.....

(Total for Question 5 = 10 marks)

DO NOT WRITE IN THIS AREA
DO NOT WRITE IN THIS AREA
DO NOT WRITE IN THIS AREA
DO NOT WRITE IN THIS AREA
DO NOT WRITE IN THIS AREA
DO NOT WRITE IN THIS AREA

6 Figure 10 shows a teaching aid for use in schools.

The teaching aid is manufactured from solid white board.

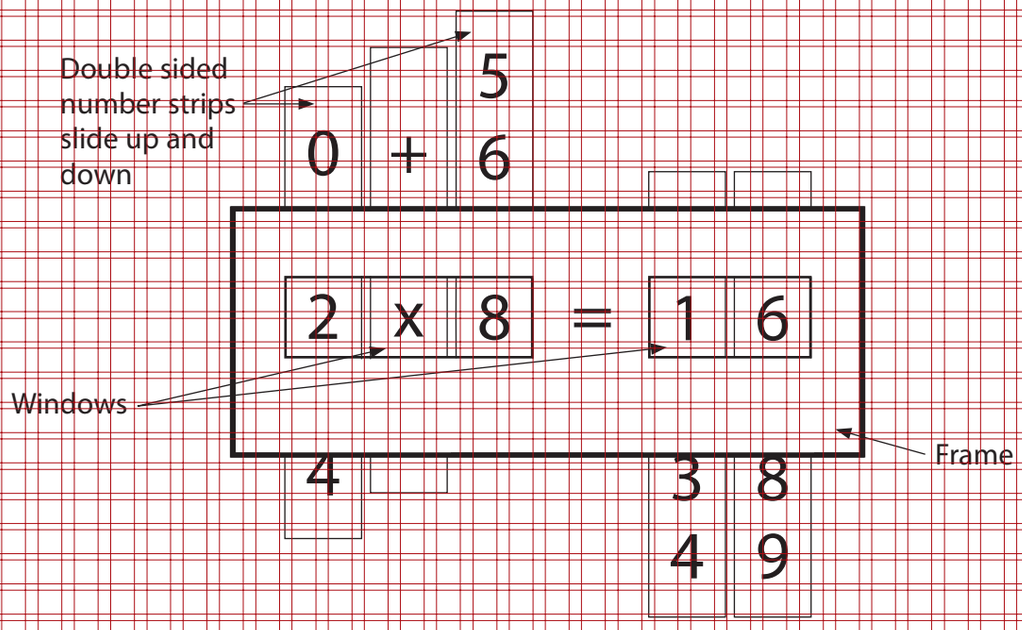

Figure 10

(a) Explain **two** working properties of solid white board that make it an ideal material from which to make the teaching aid.

(4)

1 .....

.....

.....

.....

2 .....

.....

.....

.....

DO NOT WRITE IN THIS AREA
DO NOT WRITE IN THIS AREA
DO NOT WRITE IN THIS AREA

(b) The frame of the teaching aid is made by cutting solid white board.

Use notes and sketches, in the space below, to show how the piece of solid white board would be prepared and cut to accurately make one window in the frame.

You will be marked on how you apply your understanding of design and technology, not your graphical skills.

(4)

DO NOT WRITE IN THIS AREA
DO NOT WRITE IN THIS AREA
DO NOT WRITE IN THIS AREA
DO NOT WRITE IN THIS AREA
DO NOT WRITE IN THIS AREA
DO NOT WRITE IN THIS AREA

(c) Explain **one** reason why the sliding number strips must be manufactured to a tolerance.

(2)

.....

.....

.....

.....

(d) Give **two** different surface finishes or treatments that could be applied to the solid white board number strips.

Explain **one** advantage of using each surface finish or treatment.

(6)

Surface finish or treatment 1

.....

Explanation

.....

.....

.....

Surface finish or treatment 2

.....

Explanation

.....

.....

.....

(Total for Question 6 = 16 marks)

DO NOT WRITE IN THIS AREA
DO NOT WRITE IN THIS AREA
DO NOT WRITE IN THIS AREA
DO NOT WRITE IN THIS AREA
DO NOT WRITE IN THIS AREA
DO NOT WRITE IN THIS AREA

7 Figure 11 shows a point of sale display that was delivered in a flat pack and a component that was used during the assembly of it.

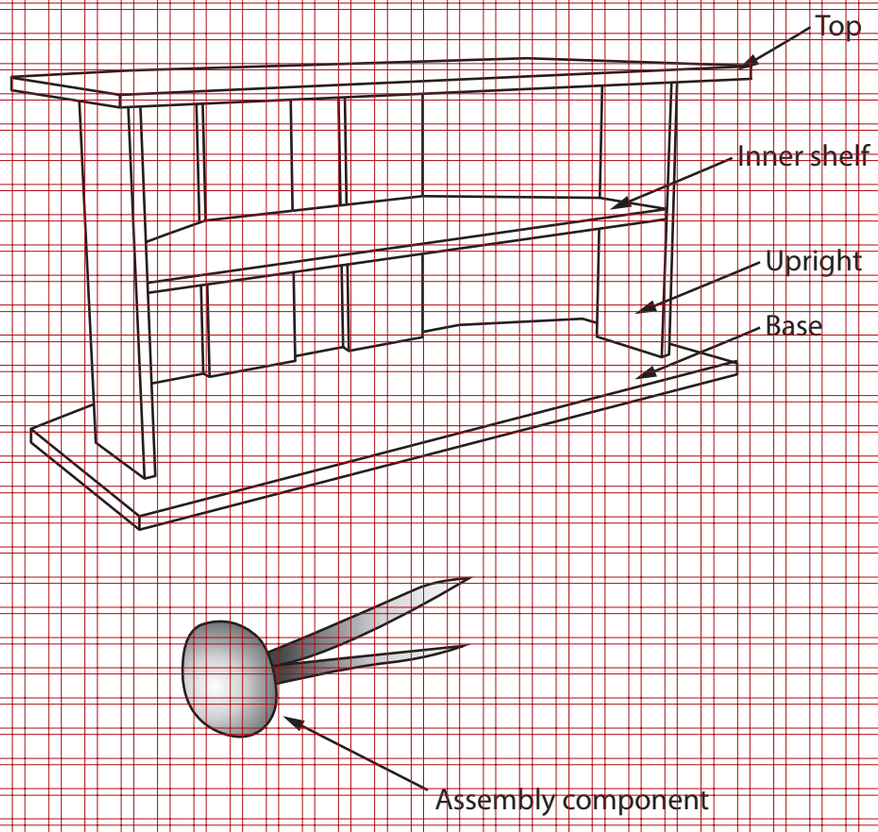

Figure 11

(a) Name the type of assembly component shown in Figure 11.

(1)

.....

DO NOT WRITE IN THIS AREA
DO NOT WRITE IN THIS AREA
DO NOT WRITE IN THIS AREA
DO NOT WRITE IN THIS AREA
DO NOT WRITE IN THIS AREA
DO NOT WRITE IN THIS AREA

Figure 12 shows a panel for the top of the point of sale display which has been designed using computer-aided design (CAD).

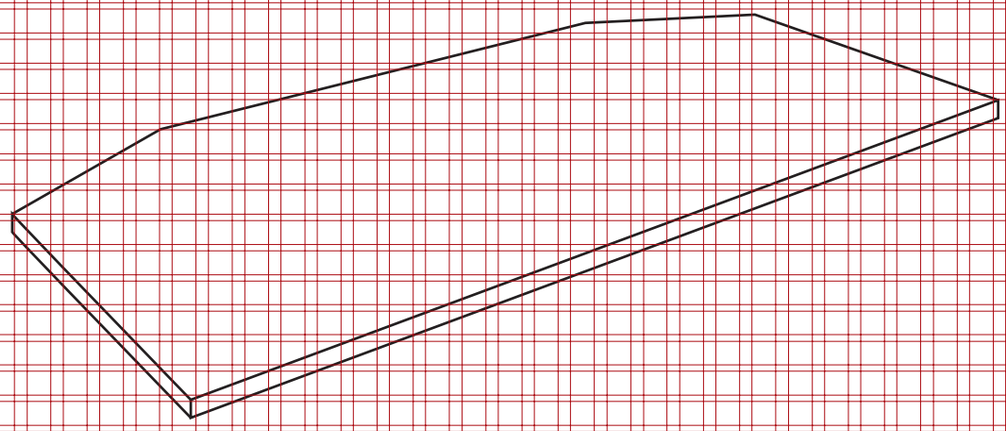

Figure 12

(b) Explain **two** advantages of using CAD when designing the point of sale display.

(4)

1 .....

.....

.....

.....

2 .....

.....

.....

.....

DO NOT WRITE IN THIS AREA
DO NOT WRITE IN THIS AREA
DO NOT WRITE IN THIS AREA
DO NOT WRITE IN THIS AREA
DO NOT WRITE IN THIS AREA
DO NOT WRITE IN THIS AREA

(c) Figure 13 shows a cutting list for the point of sale display.

The material is 6 mm thick corrugated board which costs £9 m^2.

Complete the cutting list by calculating the missing information for each of the five empty boxes, including the total cost.

All dimensions are in metres.

(5)

Part	Length (m)	Width (m)	Area (m^2)	Number required	Cost (£)
Top / base	1.0	0.45	0.45	2	.....
Inner shelf	0.8	0.3	0.24	1	.....
Uprights	0.4	0.15	.....	4	.....
				Total cost (£)	.....

Figure 13

Working out space

DO NOT WRITE IN THIS AREA
DO NOT WRITE IN THIS AREA
DO NOT WRITE IN THIS AREA
DO NOT WRITE IN THIS AREA
DO NOT WRITE IN THIS AREA
DO NOT WRITE IN THIS AREA

Products are manufactured using different scales of production.

(d) Explain **two** reasons for manufacturing the flat-packed point of sale display in batches.

(6)

1 .....

.....

.....

.....

.....

.....

2 .....

.....

.....

.....

.....

.....

(Total for Question 7 = 16 marks)

DO NOT WRITE IN THIS AREA
DO NOT WRITE IN THIS AREA
DO NOT WRITE IN THIS AREA
DO NOT WRITE IN THIS AREA
DO NOT WRITE IN THIS AREA
DO NOT WRITE IN THIS AREA

8 Figure 14 shows a set of stackable cubes for a childrens' activity pack that are manufactured from copier paper.

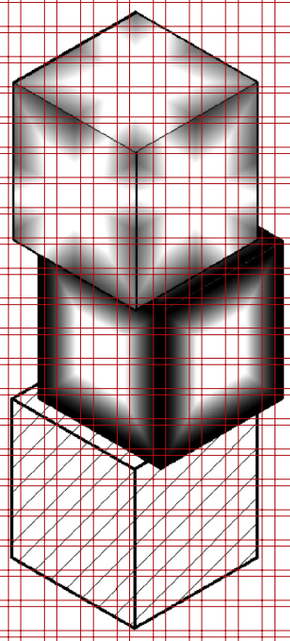

Figure 14

The bottom cube is in compression.

(a) Explain **one** possible effect of the compressive force acting upon the bottom cube.

(2)

.....

.....

.....

.....

The nets for the stackable cubes are produced using a 3 mm thick polymer stencil.

(b) Explain **one** advantage of using a stencil to produce the nets.

(3)

.....

.....

.....

.....

DO NOT WRITE IN THIS AREA
DO NOT WRITE IN THIS AREA
DO NOT WRITE IN THIS AREA
DO NOT WRITE IN THIS AREA
DO NOT WRITE IN THIS AREA
DO NOT WRITE IN THIS AREA

The pulp for the copier paper is sourced from forests in the USA.

(c) Explain **two** effects of harvesting of trees on the ecological footprint of the forests.

(4)

1 .....

.....

.....

.....

2 .....

.....

.....

.....

DO NOT WRITE IN THIS AREA
DO NOT WRITE IN THIS AREA
DO NOT WRITE IN THIS AREA
DO NOT WRITE IN THIS AREA
DO NOT WRITE IN THIS AREA
DO NOT WRITE IN THIS AREA

(d) The stackable cubes are manufactured from copier paper.

Figure 15 shows information about the stackable cubes.

Material	Copier paper
Source of material	USA
Material size	Standard stock sized materials
Printing method	Offset lithography

Figure 15

Analyse the information in Figure 15.

Evaluate the stackable cubes with reference to aesthetic and availability factors including:

- form
- colour
- sustainability.

(9)

DO NOT WRITE IN THIS AREA
DO NOT WRITE IN THIS AREA
DO NOT WRITE IN THIS AREA
DO NOT WRITE IN THIS AREA
DO NOT WRITE IN THIS AREA
DO NOT WRITE IN THIS AREA

DO NOT WRITE IN THIS AREA

DO NOT WRITE IN THIS AREA

DO NOT WRITE IN THIS AREA

(Total for Question 8 = 18 marks)

TOTAL FOR SECTION B = 60 MARKS

TOTAL FOR PAPER = 100 MARKS

P 6 5 4 2 7 A 0 2 7 2 8

BLANK PAGE

DO NOT WRITE IN THIS AREA

DO NOT WRITE IN THIS AREA

DO NOT WRITE IN THIS AREA